NorCal “Stinger Singer”

Frequency Counter Assembly & Operating Manual

Revision 2
5/4/2008

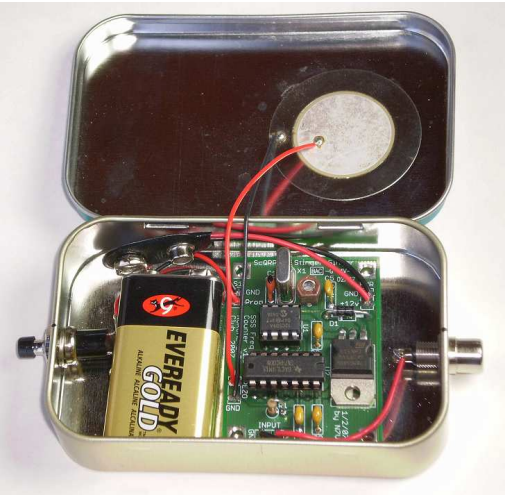

Copyright 2008

Revised and Edited by Dean Davis, N7XG

Contents

Introduction

The NorCal “Stinger Singer frequency counter was designed to be a low cost, high accuracy, full function, piece of test equipment. The counter has five frequency measurement modes, is accurate to under 10 Hz at 4 MHz, has less than 100 mV of sensitivity (10 mV at 7 MHz) and although some units count as high as 190 MHz, the specified frequency measurement range is at least 0.5 to 75 MHz. In order to keep the cost to a minimum, the frequency is given in Morse code using an internal speaker.

The kit is a club project from NorCal QRP Club and sells for only $25 which includes shipping within the continental US., or $27.50 for DX orders. This is a very inexpensive way to pick up a nice piece of test equipment!

It is VERY EASY to build. Most folks should be done within an hour, as there are only a handful of parts: Two ICs (one socketed), a 3 terminal regulator, five capacitors, one resistor, a push button switch, an external Piezo speaker, a diode for reverse battery polarity protection and a connector for a 9v battery. A comprehensive assembly and operation manual including photos may be down loaded from the NorCal website, HTTP://www.norcalqrp.org.

The counter was designed to be mounted inside an Altoids type tin. This tin has ended up being the standard enclosure for many QRP projects. This counter in particular uses the Altoids tin as a resonant audio chamber for the Piezo speaker element that is glued to the lid. No speaker holes are required as the mechanical vibrations of the Piezo unit are transferred to the Altoids tin via the lid. The end result is a frequency announcement that can be quite loud!

Assembly Notes

Tools and Supplies

- Altoids tin, your choice of flavor
- Double sided foam tape
- 9v battery
- Optional spst switch for power

Assembly

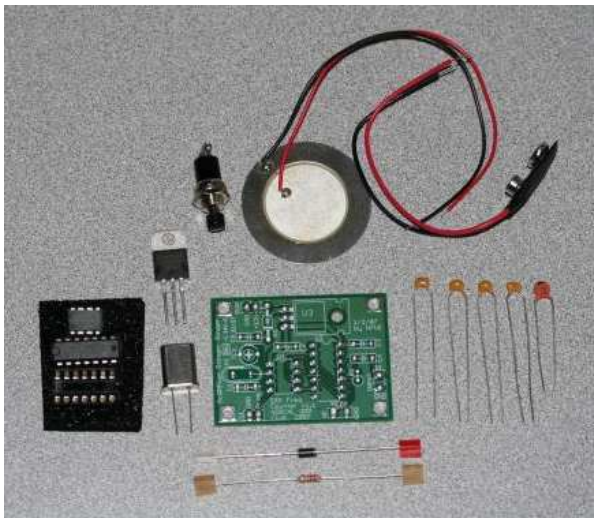

Install the following components:

- ❑ C2 .1 cap (104)
- ❑ C3 .1 cap (104)
- ❑ C4 .1 cap (104)
- ❑ C5 .1 cap (104)
- ❑ Tc1 50pf trimmer cap
- ❑ C1 33pf cap (33)
- ❑ R1 22K (red red orange gold)
- ❑ X1
- ❑ D1 Note band marking on board
- ❑ U3 Note U3 does not need to be bolted on the board
- ❑ U1 PIC12C508A
- ❑ 14 pin IC socket in U2

Attach External Parts to there board

Clip about 1 ½ inches off of the battery connector and piezo speaker. These short pieces of wire can be used for the programming button and the input connection. Remember that black always goes to ground. Attach the piezo disk, the push button, and the 9v battery connector to the board. The red wire of the 9v battery goes to the “+12v” connection, the black wire to the ground.

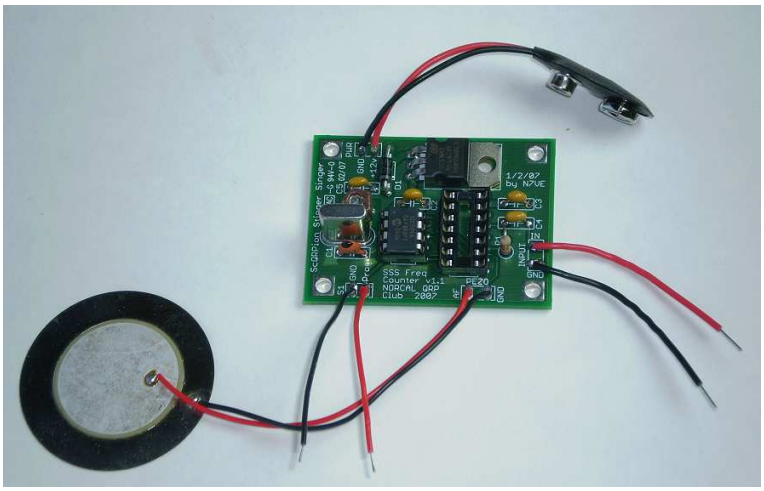

Mounting in Altoids Tin

Drill or punch holes in Altoids tin for programming button switch and RCA jack. If desired, also drill a hole for a power switch.

Mount PC board with double sided foam tape. Glue piezo disk to the Altoids Tin. Total piezo contact with the lid is desired since the lid is acting as a speaker surface, so glue well. Also mount programming switch.+

Final Assembly

Install the RCA Jack for the RF input. Connect the solder lug to ground on the board. Connect the RF IN to the jack center conductor.

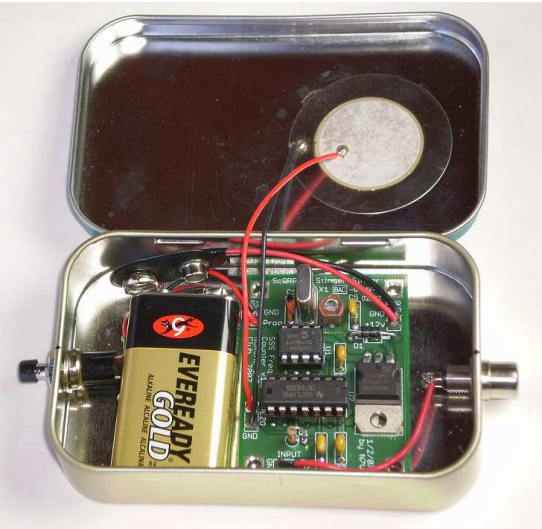

Mount U2 into the socket. Make sure the IC notches face in the proper direction! The counter is now complete. Without calibration, counter accuracy is within several hundred Hz at 4 MHz. Calibrate using known frequency source by adjusting Tc1. Accuracy within 10 Hz is typical at 4 MHz.

Ready to go:

Testing

Circuit Description

The PIC microprocessor chip can be set up to count digital pulses appearing on pin 5. The upper frequency limit of the counter software is 199.999999 MHz. This is possible because the frequency pulses incoming on pin 5 first go through an internal frequency prescaler. This PIC internal prescaler has been configured to a “divide by 256” mode, which is configured in turn to drive an 8 bit counter register. Thus the software in the PIC simply has to be fast enough to keep up with the overflows of the timer register, which at 200 MHz occurs 200e6/(256*256) or roughly 3051 times a second. The PIC running at 4 MHz is plenty fast enough to keep up with this.

The counter has a resolution of 1 Hz, which means that the counter needs to count incoming pulses for exactly one second. U2b performs this function, blocking incoming frequency pulses when a count is not being taken, and letting them pass when a one second count is needed.

The digital pulses that U2b gates come from U2c. U2c, a 74HC00 NAND gate which has been biased into the linear region, is used to convert the incoming analog RF signals into digital pulses. This input stage is simple, sensitive and very fast. At 7 MHz, the sensitivity is less than 10 mV, decreasing to 100 mV at 75 MHz. The disadvantage of this input shaping circuit is that it is so sensitive that it tends to “free run” when there is no input. The free run frequency is 80 to 120 MHz for the stock 74HC00 devices, higher when using faster 74AC00 devices.

This input impedance into U2c is high and is primarily set by the 10 pf input capacitance of the digital gate. If a 50 ohm termination is required, a 50 ohm resistor can be added across the RF input jack.

There is one final problem that needs to be addressed. Since a “divide by 256” prescaler is used in counting the incoming frequency pulses, the frequency resolution is only 256 Hz. That is where things get a bit tricky. If we could determine the count on the prescaler at the end of the one second counting window, we would then know the frequency down to 1 Hz. This is where U2a comes into play.

At the end of the one second measurement window, U2b is used to stop further incoming frequency pulses. At this point, the prescaler contains an unknown count. With gate U2b closed, gate U2a is then pulsed until the prescaler overflows to 256 and increments the counter register one more time. By watching for this additional count and keeping track of the number of times the prescaler was pulsed to get this overflow, the ending prescaler count can be calculated. With the final state of the prescaler known, the frequency can be determined down to 1 Hz.

Notice that an eight pin PIC microprocessor was used. With connections for power and ground, and two pins for the crystal oscillator, only four pins remained to do actual work. The problem I faced was that there were five functions to perform and only four pins to do it with.

This was solved by sharing the prescaler toggle function with the audio output. When the PIC toggles the prescaler at the end of the count period to capture the internal prescaler counter state, the prescaler toggle is done so fast that it is far above the audio range and lasts for a very brief time. Thus no audio tones heard.

One the other hand, when the prescaler toggle line toggled at a much slower 800 Hz rate for the cw announcement tones, the frequency counter function is not in use, so the extra toggle pulses to the prescaler don’t matter. The prescaler always gets reset just before the beginning of the next one second counter window clearing out any stray cw announcement induced counts.

The completed counter needs to be calibrated against a known frequency for best accuracy. One way of doing this is to measure a crystal oscillator that has been calibrated with a receiver to WWV. Alternatively, a crystal oscillator or stable generator can be measured with a regular bench counter, and the SSS can then be adjusted to read the same frequency.

At 4 MHz, an un-calibrated counter is usually within 400 Hz. The calibration of the counter is adjusted with the crystal trimmer capacitor TC1. Calibration within a few Hz is possible with a bit of careful tweaking.

Counter Operating Modes

The counter has five frequency measurement modes and two morse code announcement speeds. The modes are summarized below in Table 1-1:

Mode	Digits Announced
“E”	One measurement taken: 10s KHz, 1s KHz, “R”, 100s Hz
“L”	One measurement taken: 100s MHz, 10s MHz; 1s MHz, “R”, 100s KHz, 10s KHz, 1s KHz, “R”, 100s Hz, 10s Hz, 1s Hz
“F”	One measurement taken: 1s KHz, “R”, 100s Hz, 10s Hz, 1s Hz
“ER”	Like “E” above, but repeats measurements forever.
“LR”	Like “L” above, but repeats measurements forever.

Table 1-1 Counter Announcement Frequency Measurement Modes

Pressing and holding the program switch will cycle through all five counter modes at high announcement speed, then through all five at a low announcement speed. Continue to press the program button and the counter will cycle forever through all five announcement modes, switching announcement speed every time it gets through all five announcements.

When the program button is release during a given mode, the measured frequency will be announced after a 1 second count delay. The counter now remembers that mode as the default as long as the power is left on to the counter.

Notice that “R” (a cw short hand for “.”) is used as a separator to break up the MHz, KHz, and Hz digit groups.

Any frequency announcement can be interrupted by pressing the program button until a “K” is heard. This is particularly useful for stopping a repeating mode or a long “L” type frequency announcement.

Counter Usage

The different modes were designed for different reasons. The “E” mode especially short and was intended to be used to read out the frequency of a direct conversion receiver. As such, only 100 Hz resolution was desired, and knowledge of the frequency to 99.9 KHz was good enough.

The “L” mode (think “long”) was designed for general bench counter use and gives the complete frequency down to 1 Hz. Leading zeros in the 100s and 10s of MHz digits are skipped.

The “F” mode (think “filter”) was intended to aid in crystal matching for crystal filters in homebrew receivers. When crystal matching, the most significant digits don’t change. To save time, only the least significant 4 digits (1s KHz through 1s Hz) are announced.

The repeat modes “ER” and “LR” were primarily intended to allow the monitoring of frequency drift of a VFO over time. I once used this mode for two weeks non-stop as I tweaked the temperature compensation of a VFO I was building. This is my family’s favorite mode. ☺

Others who have used this counter have commented that they actually prefer to use this counter for general bench work over their normal frequency counters as it allows them to hear the frequency without taking their eyes off the circuit they are measuring.

The counter has a high speed and low speed announcement mode. The high speed is the default mode. After a short time of using this device, numbers copying speed improves dramatically. It makes a great cw "numbers" trainer!

Specifications

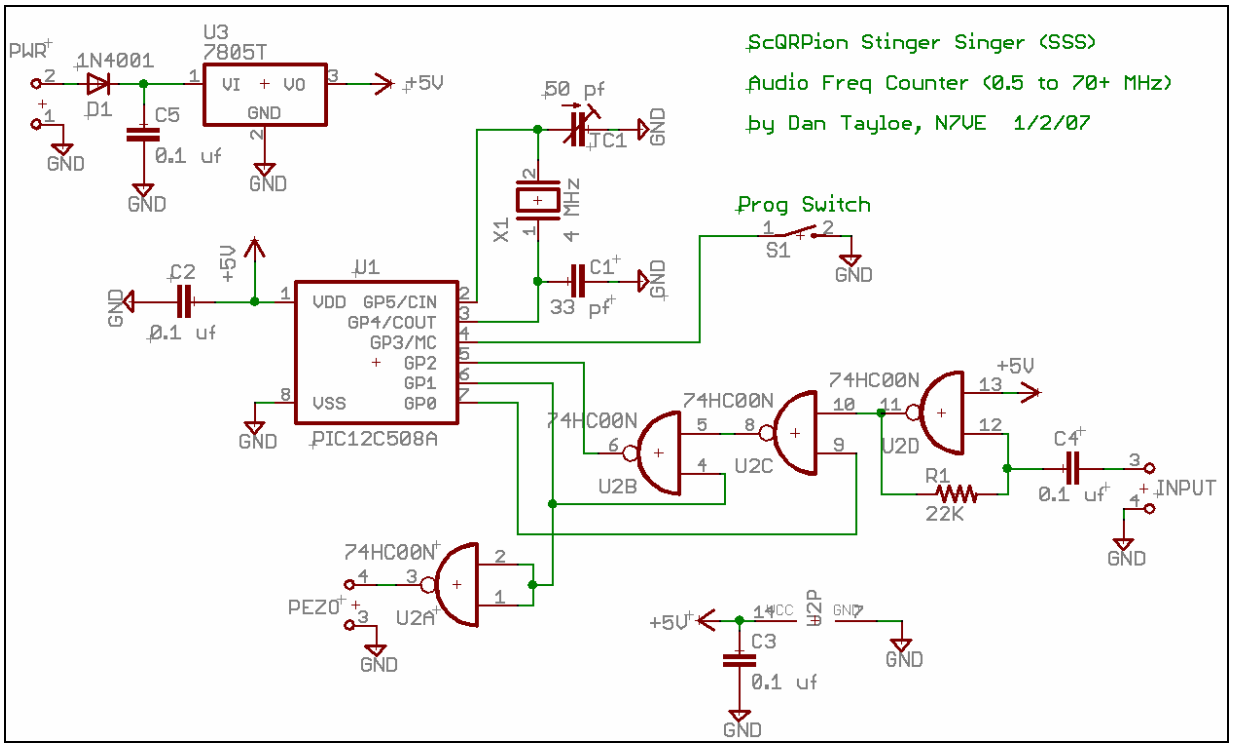

Sensitivity	~ 10 M V at 7 MHz
Frequency Range	0.5 MHz to 50 MHz minimum
Accuracy	Within 10 Hz at 4 Mhz after calibration to known frequency Source using TC1
Un-calibrated Accuracy	Within 400 Hz at 4 MHz typical
Maximum RF input	4 v peak to peak
Input supply voltage	8 to 30 v
Input impedance	Nigh impedance, not 50 ohms

Typical upper frequency is over 75 MHz with many over 150 MHz and a few at 200 MHz. Typical lower frequency is at least 0.5 MHz with many under 200 KHz. At the lower limits counts become too high. If the PIC is fast enough, a 74AC00 device is needed above ~ 125 to 150 MHz.

If input RF voltages ever exceed 5.5v peak to peak, the 74HC00 could be destroyed.

4v peak to peak is about 40 mW of RF power at 50 ohms. Do not connect the output of a transmitter directly into the counter input. For QRP levels, a minimum of 20db of 50 ohm pad (30 db is better) is recommended at the transmitter output before going to the counter.

For VFO or VXO measurements, a small coupling capacitor (5 pf) us usually sufficient to drive the counter. Sampling at a buffer is preferred to connecting directly to a VFO in order to minimize frequency pulling.

With no RF input, the counter squaring circuit is sensitive enough that it will free run at a high frequency. This is normal. This “free run” frequency is about 80 MHz with a HC part, and 120MHz with an AC 7400 part.

The Counter Kit

The kit includes all assembly instructions, photographs, and tips as well as counter specifications, frequency mode instructions, and the schematic. High quality machined pin IC sockets are included for the PIC and the 74HC00 ICs. The PC board is likewise a high quality double sided board featuring solder masks and parts legends. The builder needs only to supply an Altoids tin, super glue, hookup wire, and double sided foam tape to mount the PC board.

Appendix A Parts List

No	Qty	Ref ID	Value	Description	Color Marking
1	1	C1	33pf		33
2	4	C2-C5	.1uf		104
3	1	D1	1N4001 (or equiv)	Diode	
4	1	R1	22K 5%		red red org gld
5	1	Tc1	50 pf	Trimmer cap	brown
6	1	U1	PIC12C508A	8 pin dip	
7	1	U2	74HC00	14 pin dip	
8	1	U3	78M05	5v regulator	
9	1		8 pin dip socket		
10	1		14 pin dip socket		
11	1	X1	4mhz crystal		
12	1		Piezo Disk		
13	1		Push button		
14	1		RCA Jack		
15	1		9v battery connector		
16	1		PC board		

Optional Parts:

Rubber feet
Power switch for battery
Rechargeable battery
Velcro strips for rechargeable battery