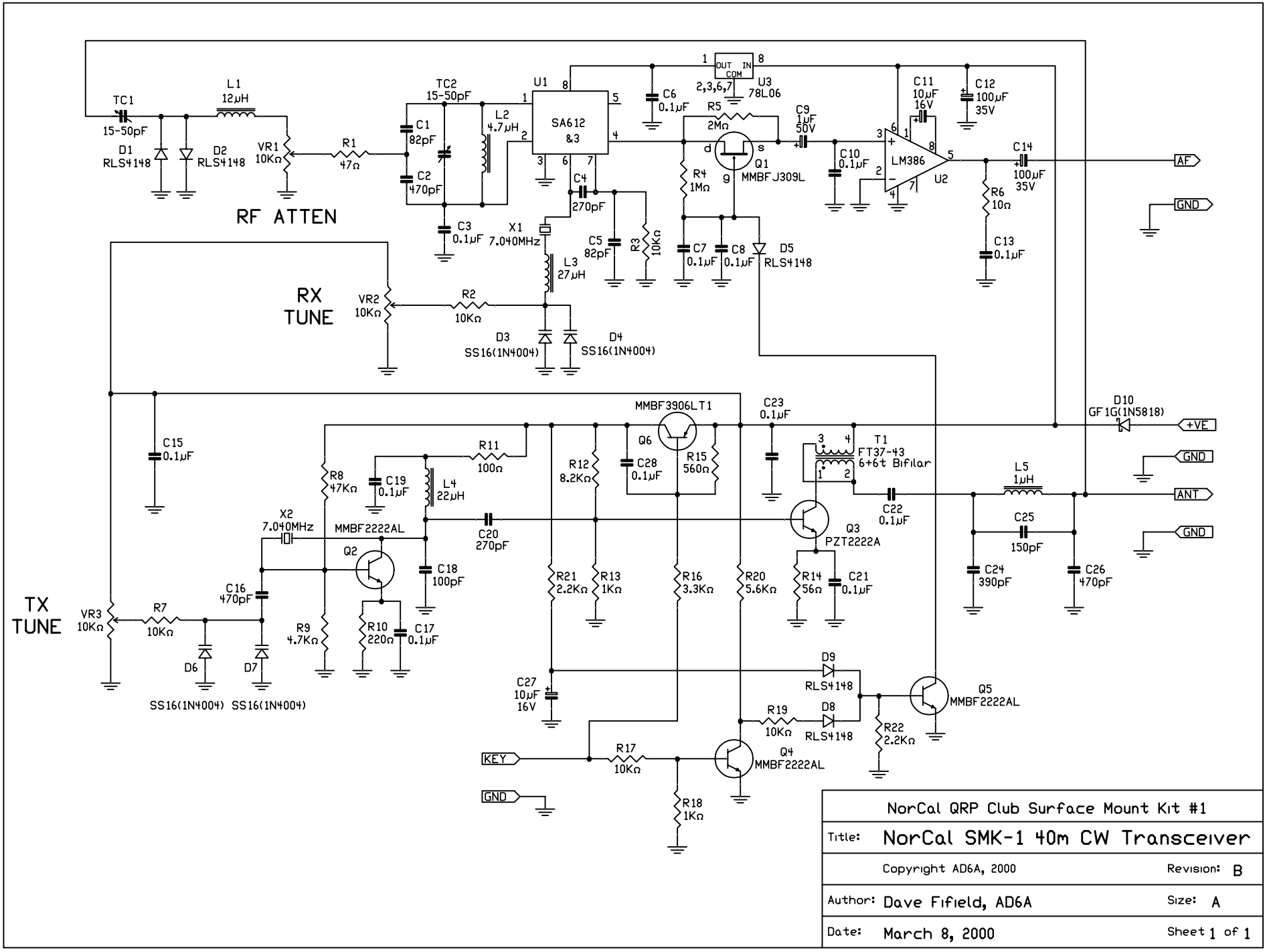
TC1
15-50pF
D1
RLS4148
D2
RLS4148
L1
12µH
VR1
10KΩ
R1
47Ω
RF ATTEN
TC2
15-50pF
C1
82pF
C2
470pF
L2
4.7µH
C3
0.1µF
U1
SA612
&3
X1
7.040MHz
L3
27µH
C4
270pF
C5
82pF
R3
10KΩ
C6
0.1µF
U3
78L06
OUT
IN
COM
2,3,6,7
R5
2MΩ
R4
1MΩ
Q1
MMBFJ309L
C7
0.1µF
C8
0.1µF
D5
RLS4148
C9
1µF
50V
C10
0.1µF
C11
10µF
16V
LM386
U2
C12
100µF
35V
C14
100µF
35V
R6
10Ω
C13
0.1µF
AF
GND
RX
TUNE
VR2
10KΩ
R2
10KΩ
D3
SS16(1N4004)
D4
SS16(1N4004)
C15
0.1µF
MMBF3906LT1
Q6
C23
0.1µF
D10
GF1G(1N5818)
+VE
GND
ANT
GND
R11
100Ω
R12
8.2KΩ
C28
0.1µF
R15
560Ω
T1
FT37-43
6+6t Bifilar
L5
1µH
R8
47KΩ
C19
0.1µF
L4
22µH
X2
7.040MHz
MMBF2222AL
Q2
C20
270pF
C22
0.1µF
Q3
PZT2222A
C25
150pF
C24
390pF
C26
470pF
C18
100pF
R21
2.2KΩ
R13
1KΩ
R16
3.3KΩ
R20
5.6KΩ
R14
56Ω
C21
0.1µF
TX
TUNE
VR3
10KΩ
R7
10KΩ
C16
470pF
R9
4.7KΩ
R10
220Ω
C17
0.1µF
D6
D7
SS16(1N4004)
SS16(1N4004)
C27
10µF
16V
D9
RLS4148
D8
RLS4148
R19
10KΩ
R22
2.2KΩ
Q5
MMBF2222AL
KEY
R17
10KΩ
Q4
MMBF2222AL
GND
R18
1KΩ
NorCal QRP Club Surface Mount Kit #1
Title: NorCal SMK-1 40m CW Transceiver
Copyright AD6A, 2000
Revision: B
Author: Dave Fifield, AD6A
Size: A
Date: March 8, 2000
Sheet 1 of 1